WALL LEGEND

LEG1833

EXST'G WALL TO REMAIN

WALL TO BE DEMOLISHED

MTL STUD WALL w/ GWB EACH SIDE - THICKNESS VARIES (UNRATED, NON-COMBUSTIBLE)

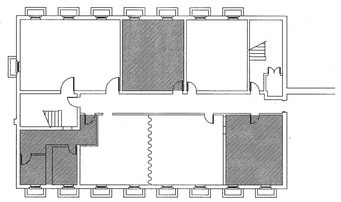

KEY PLAN

N.T.S.

KEY1833

GENERAL DEMOLITION NOTES

1. REMOVE ALL EXISTING FLOOR FINISHES THIS AREA AND PREPARE SURFACE TO RECEIVE NEW FLOORING.
2. ALL PENETRATIONS IN EXISTING WALLS AND PARTITIONS ENCOUNTERED IN THIS WORK WHICH ARE RELATED SHALL BE CAREFULLY CUT AND PATCHED TO RETAIN FIRE RATING.
3. WHERE EXISTING WALLS, FLOORS, COLUMNS, CABINETS, COUNTERS, DOOR FRAMES, CEILINGS, DUCTWORK, ELECTRICAL DEVICES, ELEC. EQUIPMENT, PLUMBING FIXTURES AND RELATED PIPING HAVE BEEN REMOVED, CONTRACTOR TO PATCH DAMAGED SURFACES TO MATCH ADJOINING SURFACES THAT WILL REMAIN EXPOSED. PATCH EXISTING SURFACES THAT ARE DISTURBED IN THE PROCESS OF REMOVAL OF THE AFOREMENTIONED ITEMS. PATCH EXISTING HOLES AND DEPRESSIONS IN THE EXISTING WALLS AND FLOOR SLABS. PATCHING MATERIAL SHALL BE THE SAME AS OR COMPATIBLE TO THE MATERIALS OF SURFACES TO BE PATCHED.
4. WHERE RECESSED WALL DEVICES AND OTHER ACCESSORIES HAVE BEEN REMOVED FROM WALLS THAT REMAIN, PATCH OPENINGS AS REQUIRED TO MATCH EXISTING CONSTRUCTION.
5. WHERE EXISTING WALLS HAVE BEEN REMOVED, PATCH DAMAGE TO ADJOINING WALLS WHICH ARE TO REMAIN.
6. WHERE AN EXISTING OPENING IS CLOSED, OR AN EXISTING PARTITION IS EXTENDED WITH NEW WORK, FINISH FACE OF NEW WORK FLUSH WITH EXISTING FINISH.
7. WHERE AN EXISTING PARTITION HAS BEEN REMOVED BETWEEN ROOMS AND THE ADJOINING FLOOR SURFACES ARE UNEVEN, THE FLOOR SURFACES SHALL BE LEVELED TO EACH OTHER.
8. THE GENERAL CONTRACTOR IS RESPONSIBLE TO MAKE GOOD ALL SURFACES THAT ARE TO REMAIN AFTER DEMOLITION CONTRACT OCCURS. (CEILING, WALLS FLOORS, ETC.)
9. THE GENERAL CONTRACTOR IS RESPONSIBLE FOR COORDINATING THE REMOVAL OF ALL DEMOLITION DEBRIS FROM THE SITE.
10. THE GENERAL CONTRACTOR IS RESPONSIBLE FOR MAINTAINING THE EXISTING FIRE RATING OF EXISTING INTERIOR COLUMNS AS REQUIRED.
11. DEMOLITION AS REQUIRED TO ACCOMMODATE NEW CONSTRUCTION AT EXISTING WALL OPENING TO BE INFILLED.
12. EXST'G FLOOR CABINETS AND COUNTERTOPS TO BE REMOVED. EXST'G SINK TO BE REMOVED IF APPLICABLE.
13. REFER TO FLOOR PLANS FOR NEW PARTITION LOCATIONS.
14. EXST'G SOFFITS TO REMAIN THROUGHOUT. MECHANICAL GRILLES TO REMAIN.
15. EXST'G DOOR TO BE REMOVED. EXST'G FRAME TO REMAIN.
16. ALL NEW ROUGH DOOR OPENINGS TO ACCOMMODATE 3'-0" x 6'-8" SCWD AND FRAME. G.C. TO VERIFY ALL DOOR SIZES - NEW DOORS / FRAMES NEED TO MATCH EXST'G HEIGHTS.
17. ALL EXST'G WINDOWS TO BE REMOVED AND READIED FOR REPLACEMENT WINDOWS UNLESS NOTED OTHERWISE. G.C. TO VERIFY ALL WINDOW OPENINGS BEFORE ORDERING.
18. EXST'G ACT AND GRID CLG (WHERE IT EXISTS) TO BE REMOVED AND READIED FOR NEW 2 x 2 ACT AND GRID THROUGHOUT UNLESS INDICATED OTHERWISE. EXST'G SOFFITS TO REMAIN THROUGHOUT.
19. EXISTING RESTROOM FLOORING AND WALL TILE TO BE REMOVED TO PREPARE FOR NEW FINISHES.

DEMOLITION OF UTILITIES:

1. EXST'G RESTROOMS TO BE DEMO'D AS NOTED.
2. MECHANICAL SYSTEMS: TO REMAIN.
3. EXST'G CEILING LIGHTS TO BE REMOVED.
4. EXST'G SINKS TO BE REMOVED AS NOTED.

GENERAL FLOOR PLAN NOTES

gn001833

UNLESS NOTED OTHERWISE

1. ALL NEW WALLS TO BE TAPED, MUDDED, SANDED, AND PRIMED READY FOR TENANT COVERING. ALL EXST'G WALL COVERINGS TO BE REMOVED. EXST'G WALLS TO BE SKIMMED SMOOTH AND PRIMED. PATCH WALLS AS NEEDED WHERE MODIFICATIONS ARE REQUIRED. G.C. TO PAINT ALL INTERIOR WALLS WHITE (2 COATS).
2. ALL NEW WALLS TO BE 3-5/8" MTL STUDS @ 16" oc w/ 5/8" GWB ea SIDE. PROVIDE R-13 BATT INSULATION FULL HEIGHT.
3. ALL MOUNTING HEIGHTS OF RESTROOM FIXURES ARE SHOWN ON DTL 2103. TOILET ACCESSORY SCHEDULE SHOWN ON SHEET A2.1.
4. ALL EXPOSED CMU WALLS TO BE COVERED w/ 7/8" HAT CHANNELS AND 5/8" GWB. G.C. TO FOLLOW NOTE 1 REGARDING NEW WALLS.
5. G.C. TO INSTALL NEW 2 x 2 LAY-IN ACT AND GRIDS AT SOFFIT CLG HEIGHT. EACH NEW CLASSROOM TO HAVE (6) 2 x 4 FLUORESCENT LIGHTS SPACED ACCORDINGLY. CORRIDORS TO HAVE 2 x 4 FLUORESCENT LIGHTS. NEW LAY-IN CLG TO BE TIGHT TO EXSTING FRAMING. NEW ACT, GRIDS, AND LIGHTS TO MATCH MODEL ROOM.
6. G.C. TO INSTALL NEW CABINETS, AND COUNTERTOP. A NEW SINK IS TO BE INSTALLED ONLY IF AN EXST'G SINK WAS REMOVED DURING DEMOLITION. MATERIAL SELECTIONS BY CHURCH REPRESENTATIVE. G.C. TO PRICE 6' AND PRICE 8' AS AN ALTERNATE. ALL FLOOR AND WALL CABINETS, HARDWARD, COUNTERTOPS, AND FINISHES TO MATCH MODEL ROOM.
7. ALL NEW DOORS TO BE SCWD. ALL DOORS TO HAVE A 8"W x 3'-0"H VIEW PANEL EXCEPT RESTROOMS. FINISH AND HARDWARE SELECTIONS BY CHURCH REPRESENTATIVE. G.C. TO FIELD VERIFY ALL EXST'G OPENINGS. G.C. TO REPLACE ALL DOORS EXCEPT FOR THE TWO DOORS THAT LEAD TO THE SMALL RESTROOM ON THE MAIN LEVEL AS INDICATED ON DTL 2201.
8. CHURCH REPRESENTATIVE TO SELECT VANITY/CABINET VS. WALL HUNG LAV AT FIRST AND THIRD FLOORS. HEIGHTS TO MEET INTERNATIONAL BUILDING CODE AND AMERICANS w/ DISABILITIES ACT REQUIREMENTS.
9. G.C. TO INFILL WALL OPENINGS. FOLLOW FLOOR PLAN NOTE 1.
10. FME ENGINEERING / PLANS TO BE PROVIDED & PERMITTED BY SUBCONTRACTORS AS PART OF THE BID PACKAGE.
11. ELECTRICAL SUBCONTRACTOR TO INSTALL AUTOMATIC MOTION SENSORS IN ALL ROOMS FOR LIGHTING.
12. G.C. TO TRIM AROUND ALL DOORS AND WINDOWS TO MATCH MATERIALS IN MODEL ROOM. NEW BASE BOARD THROUGHOUT TO MATCH MODEL ROOM.
13. EXST'G SOFFITS TO BE LAMINATED w/ 3/8" GWB. G.C. TO FOLLOW FLOOR PLAN NOTE 1 FOR NEW WALLS.
14. G.C. TO INSTALL NEW INSULATED, C-TINTED, LOW E WINDOWS w/ INTERIOR GRILLS AT ALL LOCATIONS. G.C. TO FIELD VERIFY ALL EXST'G OPENINGS BEFORE ORDERING NEW WINDOWS.
15. ELECTRICAL PLANS TO BE PERMITTED BY G.C. / SUB.
16. PLUMBING PLANS TO BE PERMITTED BY G.C. / SUB.
17. NEW SINGLE BASIN SINK - MATCH MODEL ROOM TYPE.
18. APPLICABLE STANDARDS OF CONSTRUCTION INDUSTRY HAVE SAME FORCE AND EFFECT (AND ARE MADE APART OF CONTRACT DOCUMENTS BY REFERENCE) AS IF COPIED DIRECTLY INTO CONTRACT DOCUMENTS, OR AS IF PUBLISHED COPIES WERE BOUND HEREWITH.
19. ALL RESTROOMS TO INCLUDE 4 x 4 CERAMIC TILE TO 5'-0" AFF w/ CEMENT BACKER BOARD. FLOORS TO HAVE 2 x 2 CERAMIC TILE AND ALL DOOR OPENINGS TO HAVE MARBLE THRESHOLD - SEE CHURCH REPRESENTATIVE FOR TILE AND PAINT SELECTIONS.
20. G.C. TO INSTALL FLOOR DRAINS IN BOTH RESTROOMS ON THE UPPER LEVEL - SEE PLUMB'G DRAWINGS FOR EXACT LOCATION.
21. NO CHANGE TO MATERIALS IN THIS ROOM.

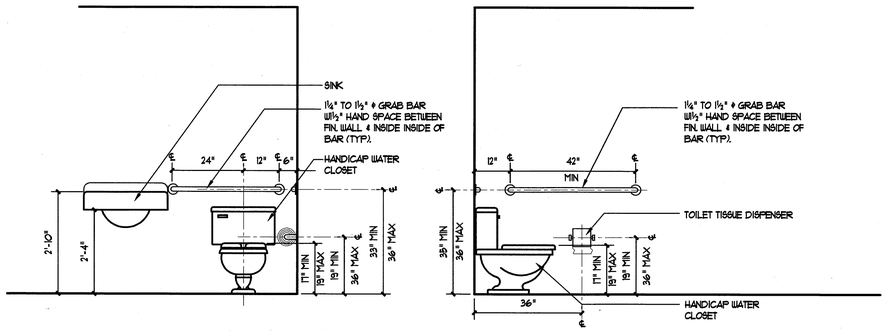

2103 H.C. FIXTURE MOUNTING HEIGHT DTLS

1/2" = 1'-0"

D0001833

TOILET ACCESSORY SCHEDULE		D0002833
MARK	DESCRIPTION	INSTALLATION
A	TOILET PAPER DISPENSER	WALL MTD @ 19" AFF
B	42" HANDICAPPED GRAB BAR	1-1/2" DIA WALL MTD - 36" AFF
C	36" HANDICAPPED GRAB BAR	1-1/2" DIA WALL MTD - 36" AFF
D	MIRROR - SIZE TO BE CONFIRMED BY CHURCH REPRESENTATIVE	SURFACE MTD - CONCEALED HANGERS

ACCESSORY NOTES:

1. COORDINATE REQUIREMENTS OF TOILET ACCESSORIES WITH REQUIREMENTS OF TOILET PARTITION INSTALLATION.
2. TOILET ACCESSORY MOUNTING HGTS TO BE PER INTERNATIONAL BLDG CODE AND AMERICANS WITH DISABILITIES ACT REQUIREMENTS.
3. PROVIDE WD BLOCK'G IN WALL @ ALL GRAB BAR LOCATIONS & AS RECOMMENDED BY ACCESSORY SUPPLIER FOR OTHER ACCESSORIES.
4. MIRROR (MARK D) TO BE INSTALLED w/ BOT @ 40" AFF.
5. TOILET PAPER DISPENSER TO BE FURNISHED & INSTALLED BY GC.
6. ALL WATER CLOSETS TO BE CENTERED BETWEEN TOILET PARTITIONS UNLESS DIMENSIONED OTHERWISE, IF APPLICABLE.

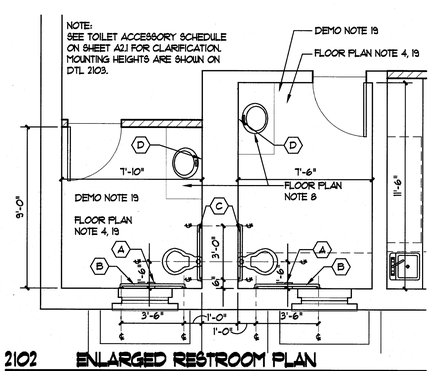

2102 ENLARGED RESTROOM PLAN

1/4" = 1'-0"

BP001833

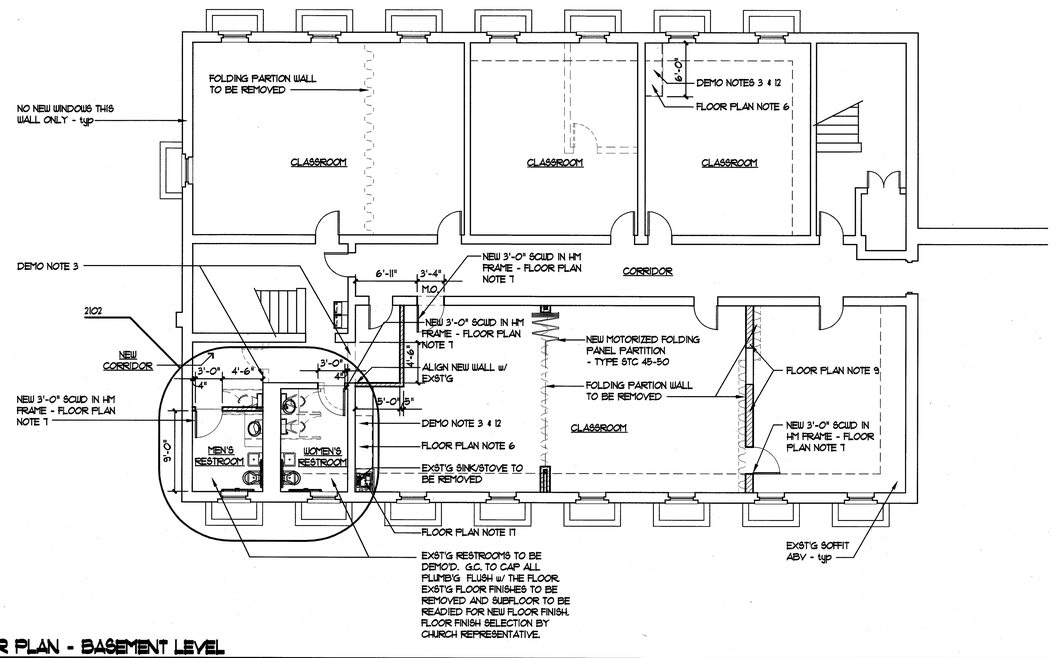

2101 FLOOR PLAN - BASEMENT LEVEL

1/8" = 1'-0"

BP001833

ANDREW J. LOPINA
REGISTERED ARCHITECT
7188
6-17-09
NORTH CAROLINA
WINSTON-SALEM, NC

THOMAS H. HUGHES/ARCHITECT, INC.
REGISTERED ARCHITECTURAL CORPORATION
LICENSE NO. 50943
NORTH CAROLINA
WINSTON-SALEM, NC

Fax 336-722-4402
336-722-4447

THH Thomas H. Hughes Architecture, P.C.
155 Stratfordshire Court, Suite 100 Winston-Salem, NC 27106

REVISIONS

COPYRIGHT 2009

COLLEGE PARK BAPTIST CHURCH

Building Renovations - Phase I

1701 Polo Road

Winston-Salem, North Carolina 27106

JOB 08-33

DATE June 17, 2009

DRAWN V. Shaffer

SHEET A2.1

OF -

gn001833